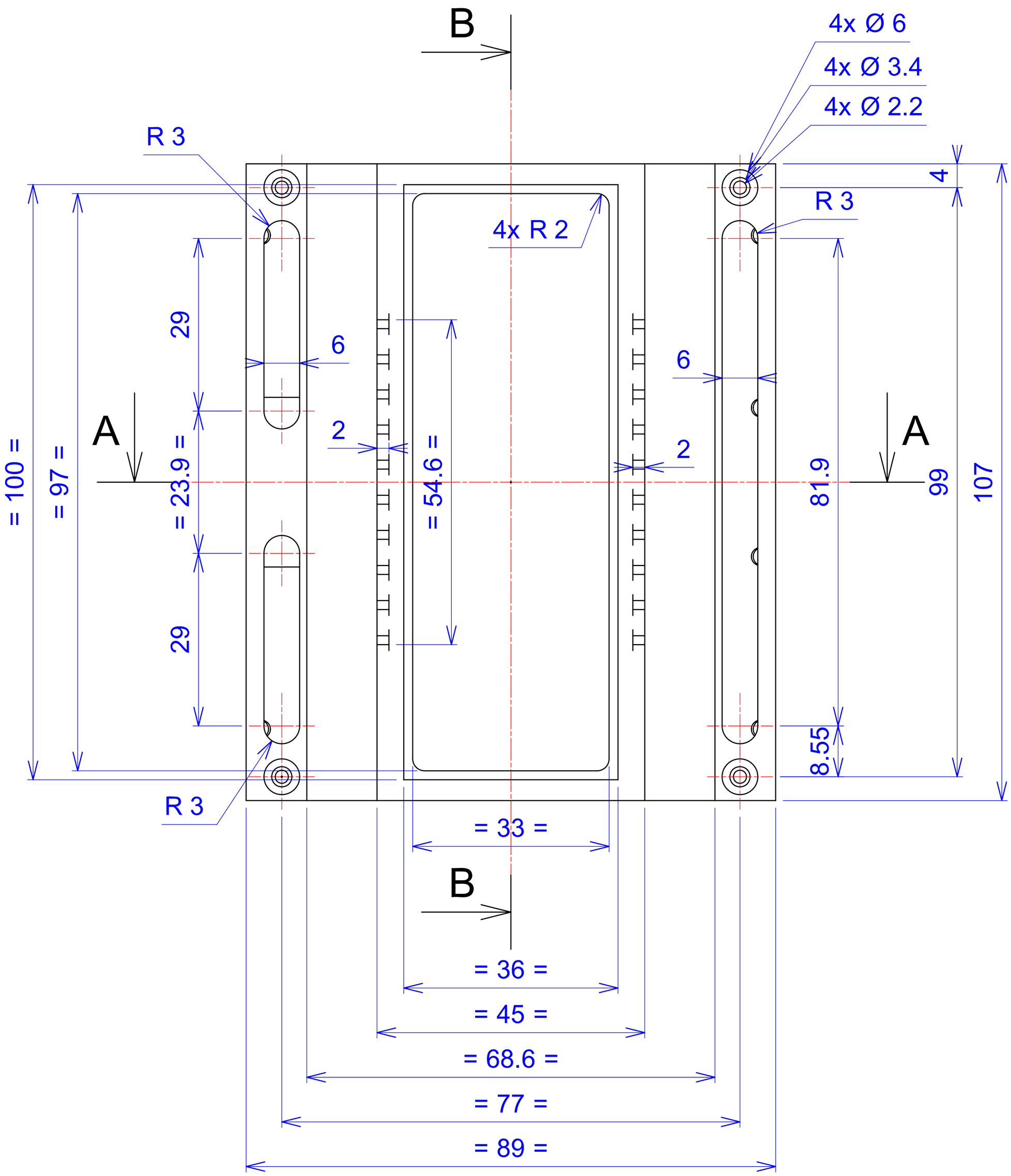
B
4x Ø 6
4x Ø 3.4
4x Ø 2.2
R 3
4
R 3
4x R 2
29
6
6
A
2
2
A
= 100 =
= 97 =
= 23.9 =
= 54.6 =
81.9
99
107
29
8.55
R 3
= 33 =
B
= 36 =
= 45 =
= 68.6 =
= 77 =
= 89 =

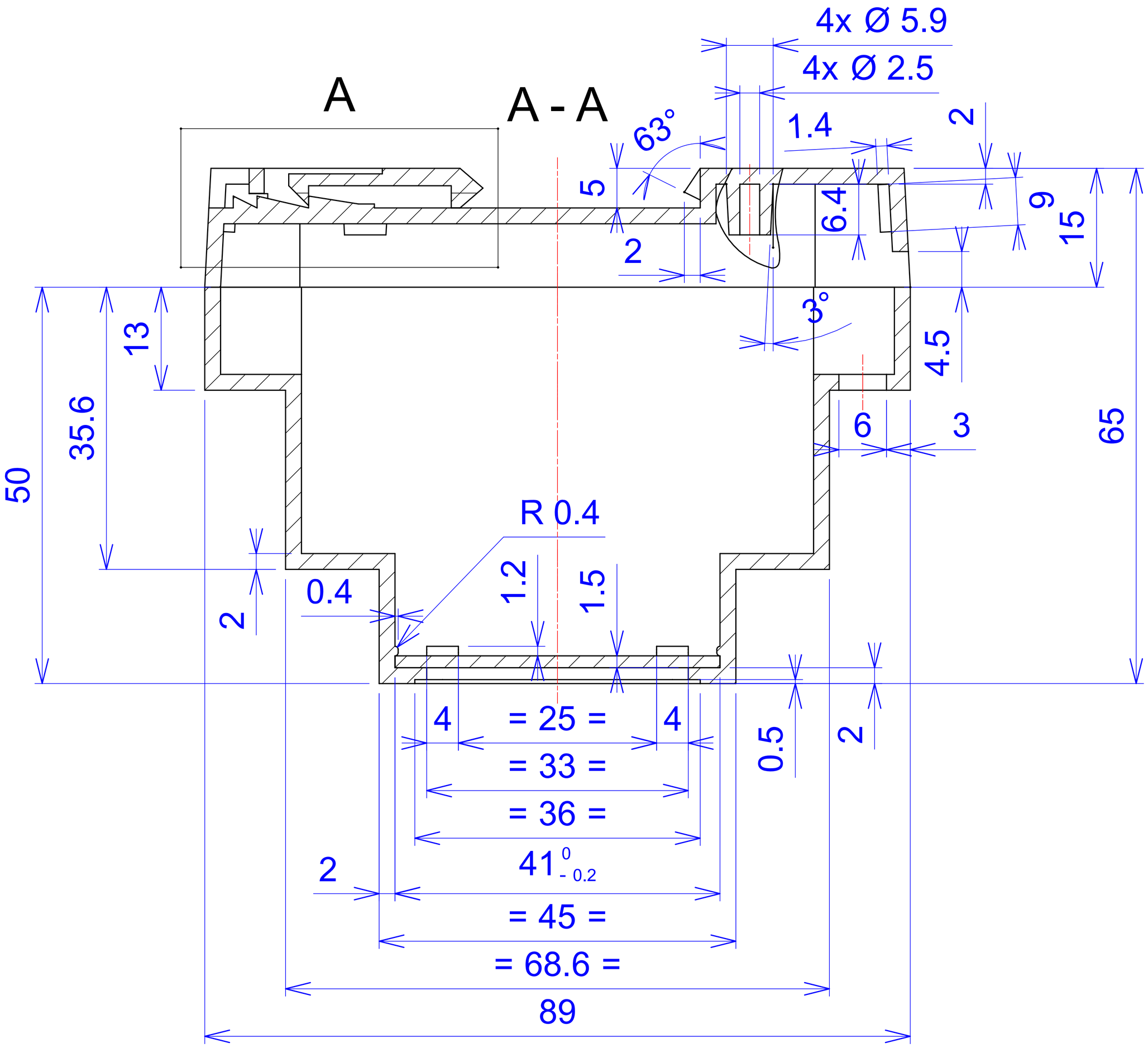
A
A - A
4x Ø 5.9
4x Ø 2.5
63°
1.4
2
5
6.4
9
15
2
3°
13
4.5
35.6
50
6
3
65
R 0.4
1.2
1.5
0.4
2
4
= 25 =
4
= 33 =
= 36 =
0.5
2
2
41 0 - 0.2
= 45 =
= 68.6 =
89

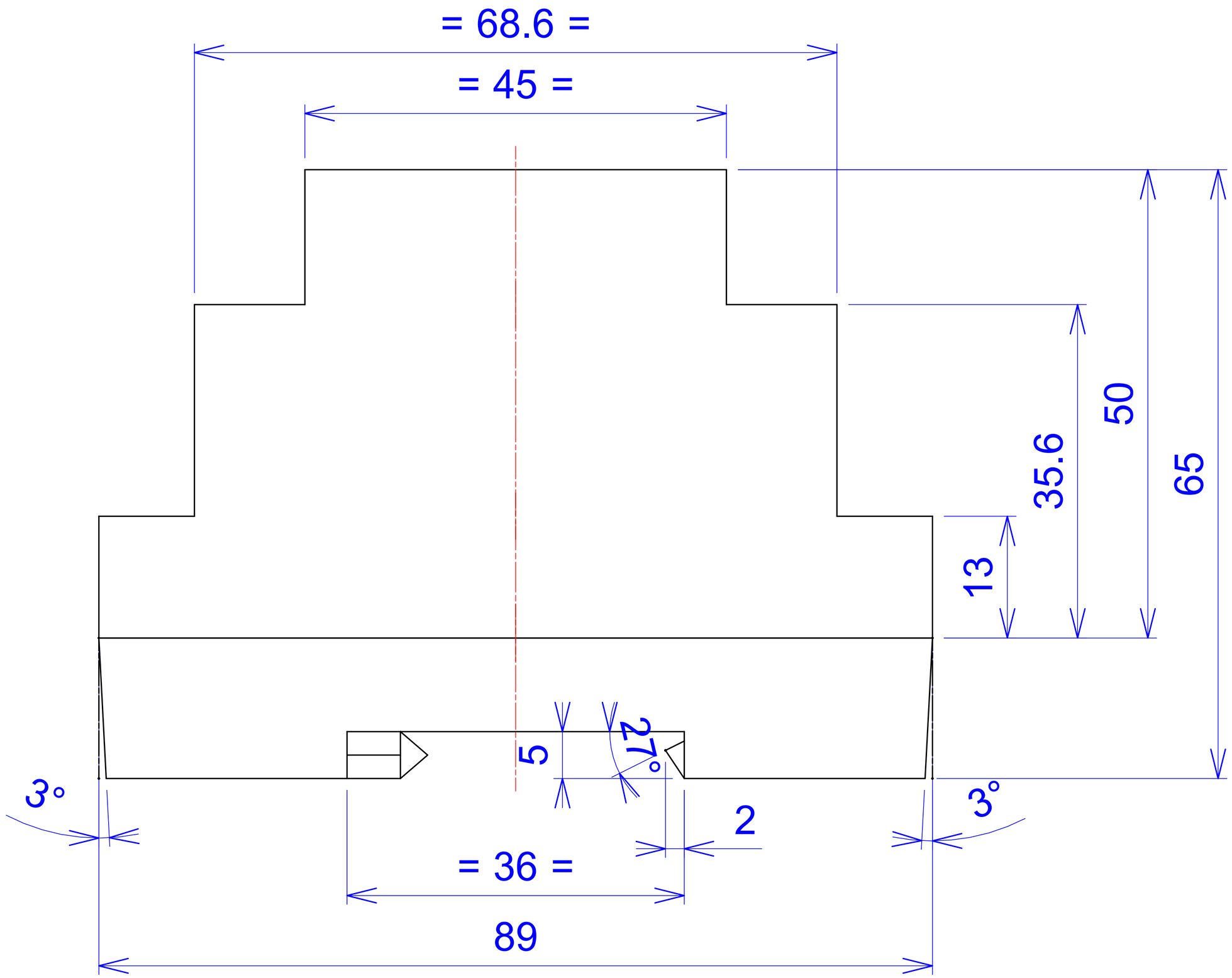
= 68.6 =
= 45 =
50
35.6
65
13
5
17°
3°
2
3°
= 36 =
89

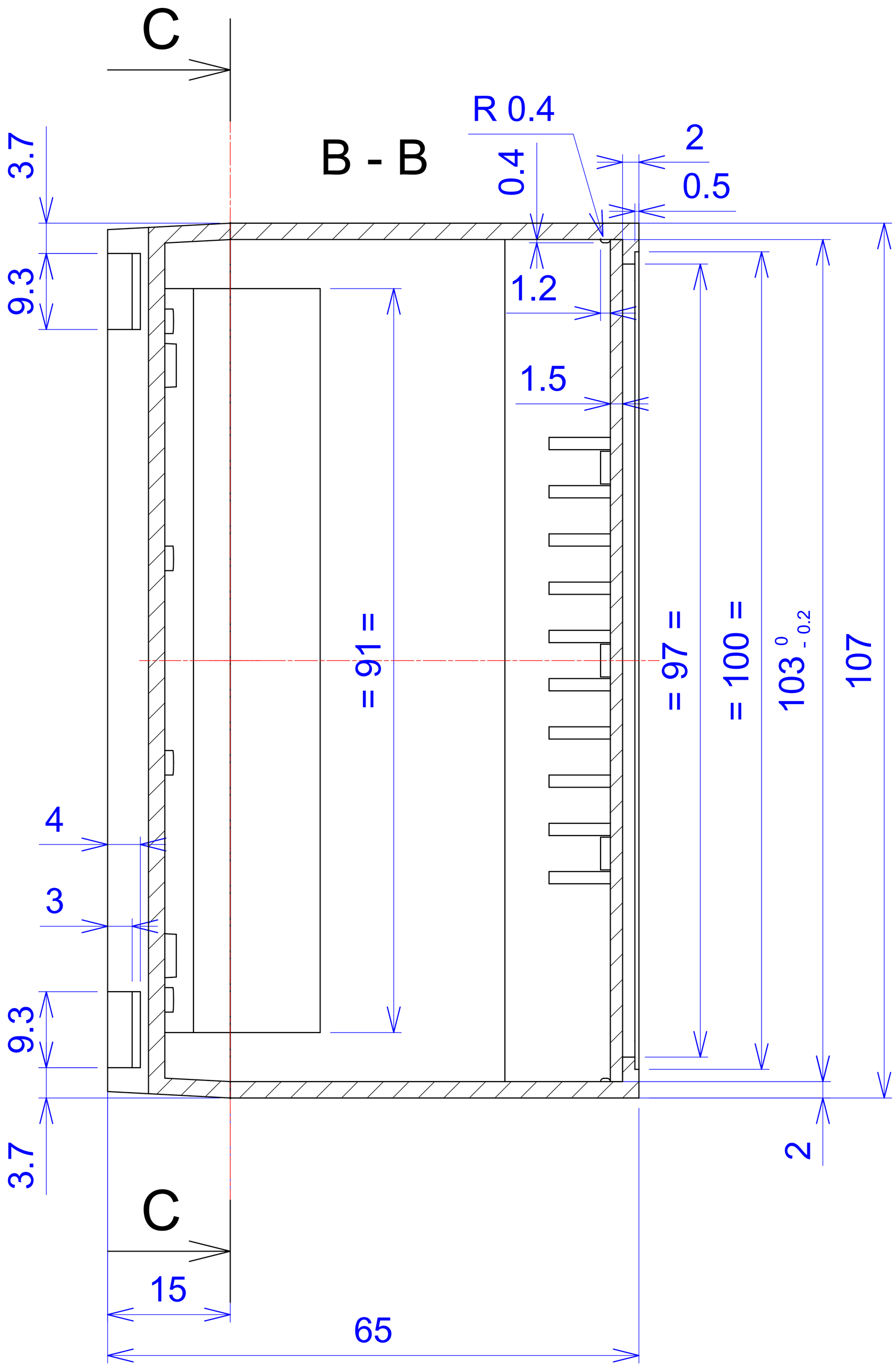
C
B - B
R 0.4
2
0.5
0.4
1.2
1.5
3.7
9.3
= 91 =
= 97 =
= 100 =
103 0 - 0.2
107
4
3
9.3
3.7
2
C
15
65

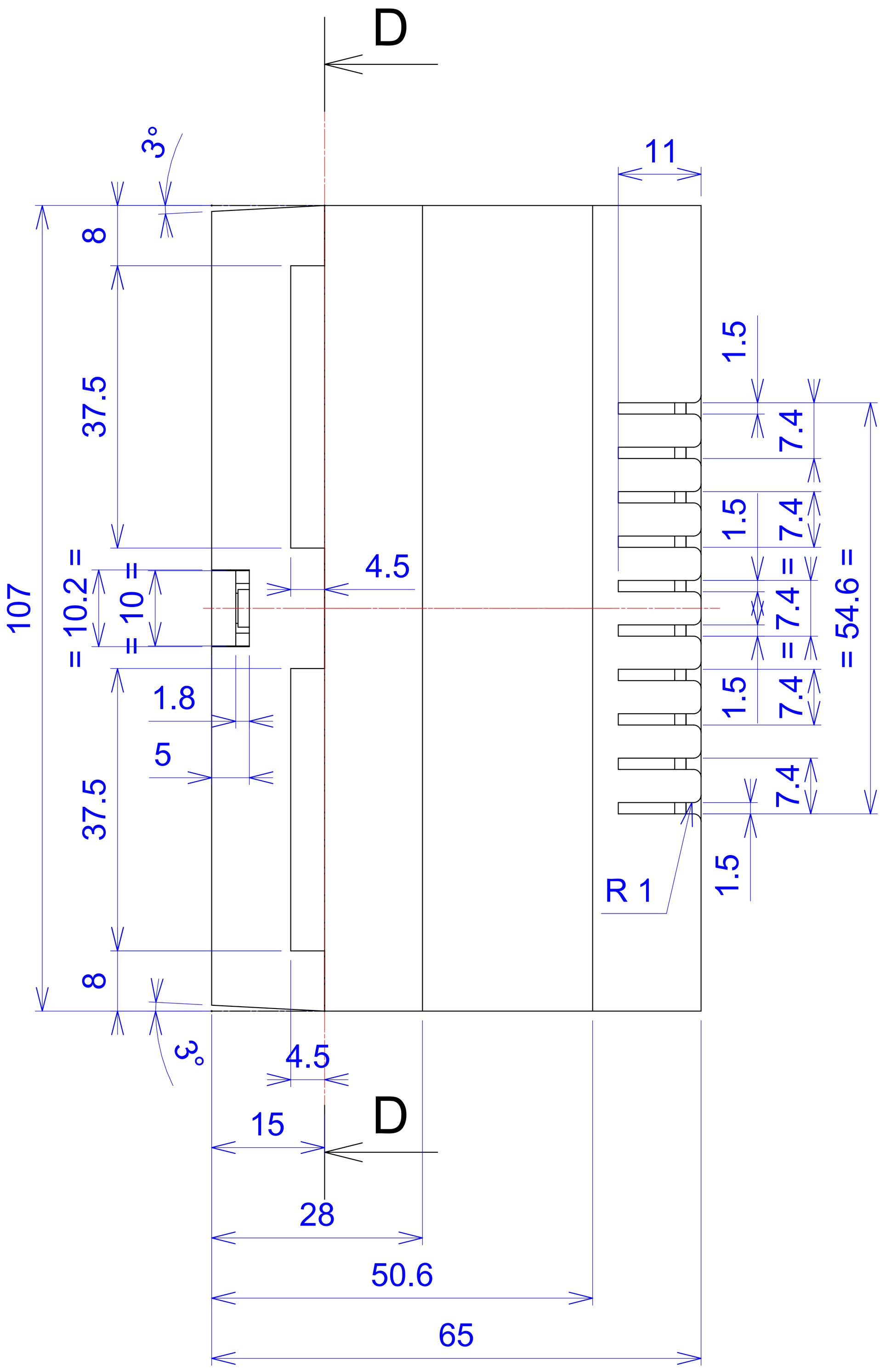
D
3°
11
8
37.5
1.5
7.4
1.5
7.4
4.5
107
= 10.2 =
= 10 =
= 7.4 =
= 54.6 =
1.8
5
1.5
7.4
37.5
7.4
1.5
R 1
8
3°
4.5
15
D
28
50.6
65

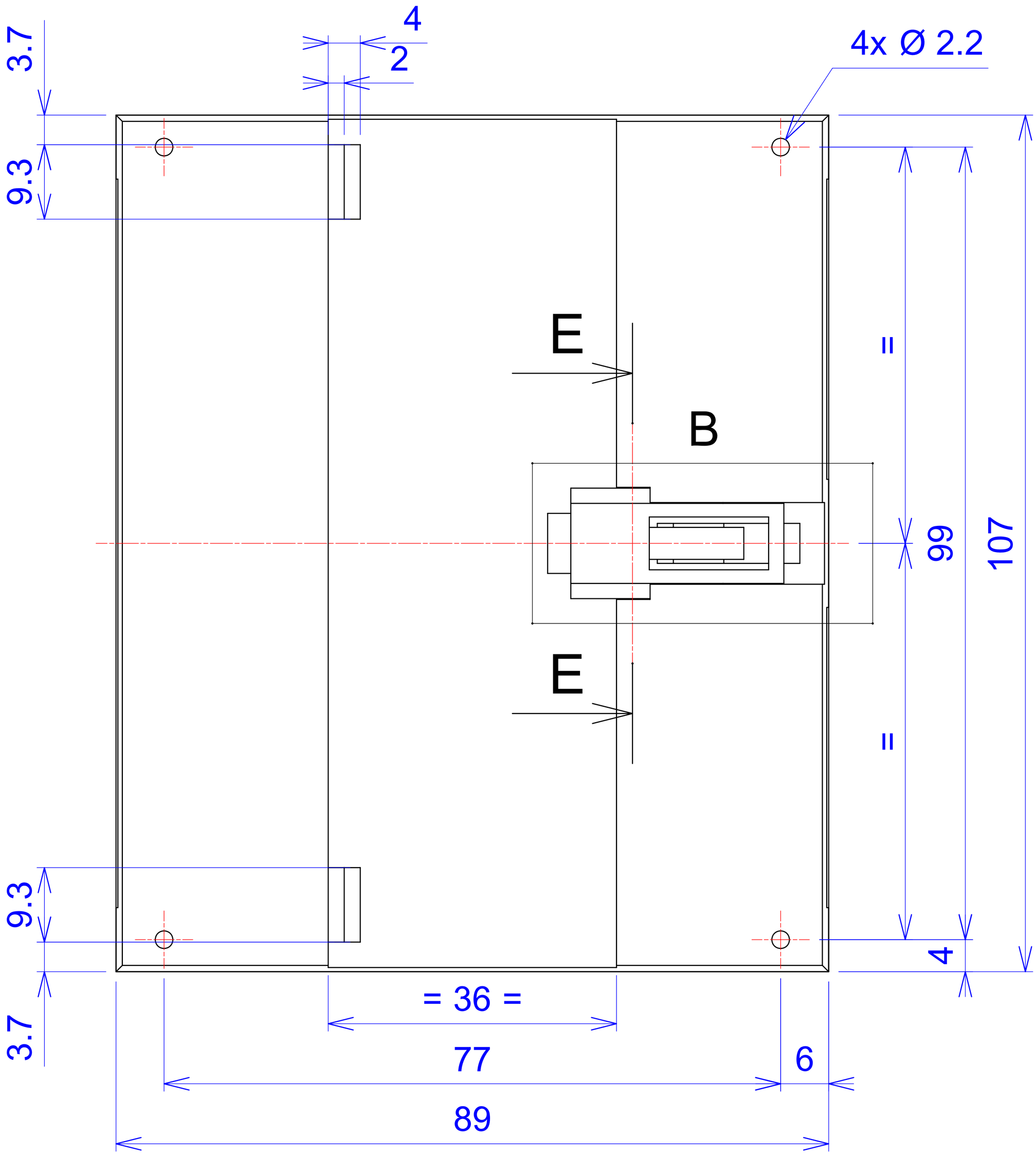
4
2
4x Ø 2.2
3.7
9.3
E
B
E
99
107
9.3
4
3.7
= 36 =
77
6
89

# C - C

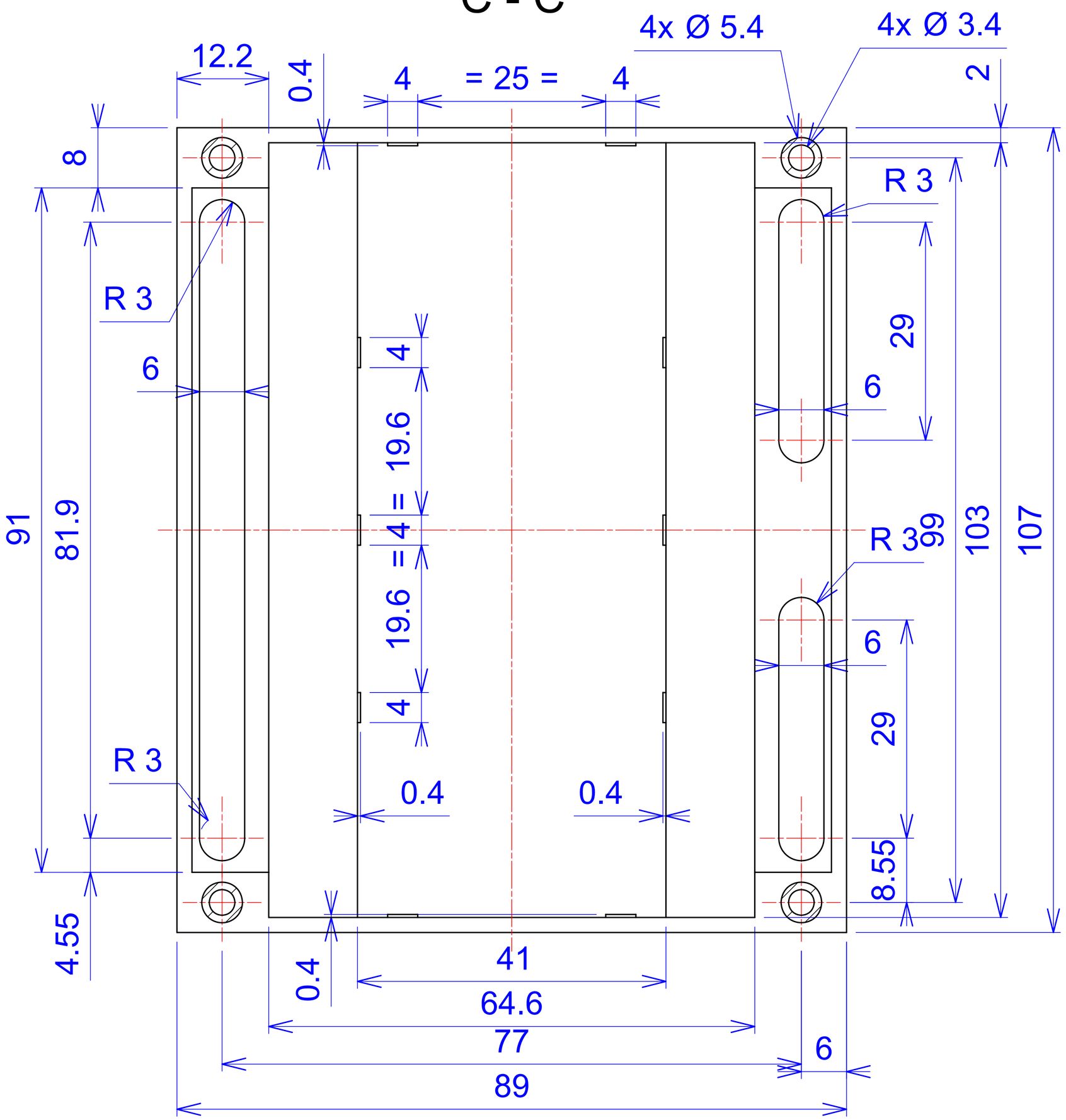
4x Ø 5.4
4x Ø 3.4
12.2
0.4
4
= 25 =
4
2
8
R 3
R 3
29
6
6
4
19.6
= 4 =
19.6
4
91
81.9
R 3
99
103
107
6
29
R 3
0.4
0.4
8.55
4.55
0.4
41
64.6
77
6
89

# D - D

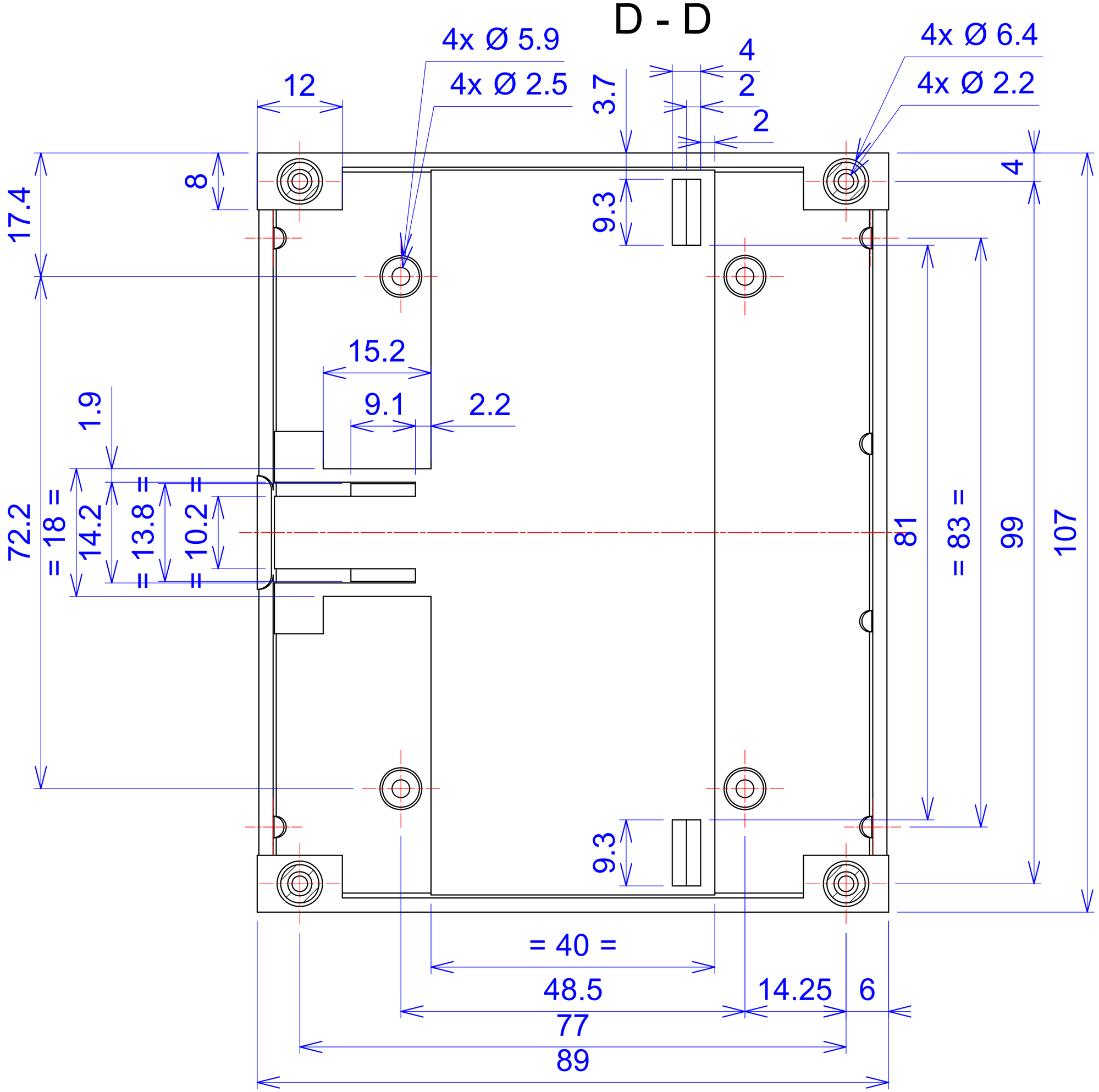
4x Ø 5.9
4x Ø 2.5
4x Ø 6.4
4x Ø 2.2
12
8
17.4
3.7
4
2
2
9.3
4
15.2
9.1
2.2
1.9
72.2
= 18 =
14.2
= 13.8 =
= 10.2 =
81
= 83 =
99
107
9.3
= 40 =
48.5
14.25
6
77
89

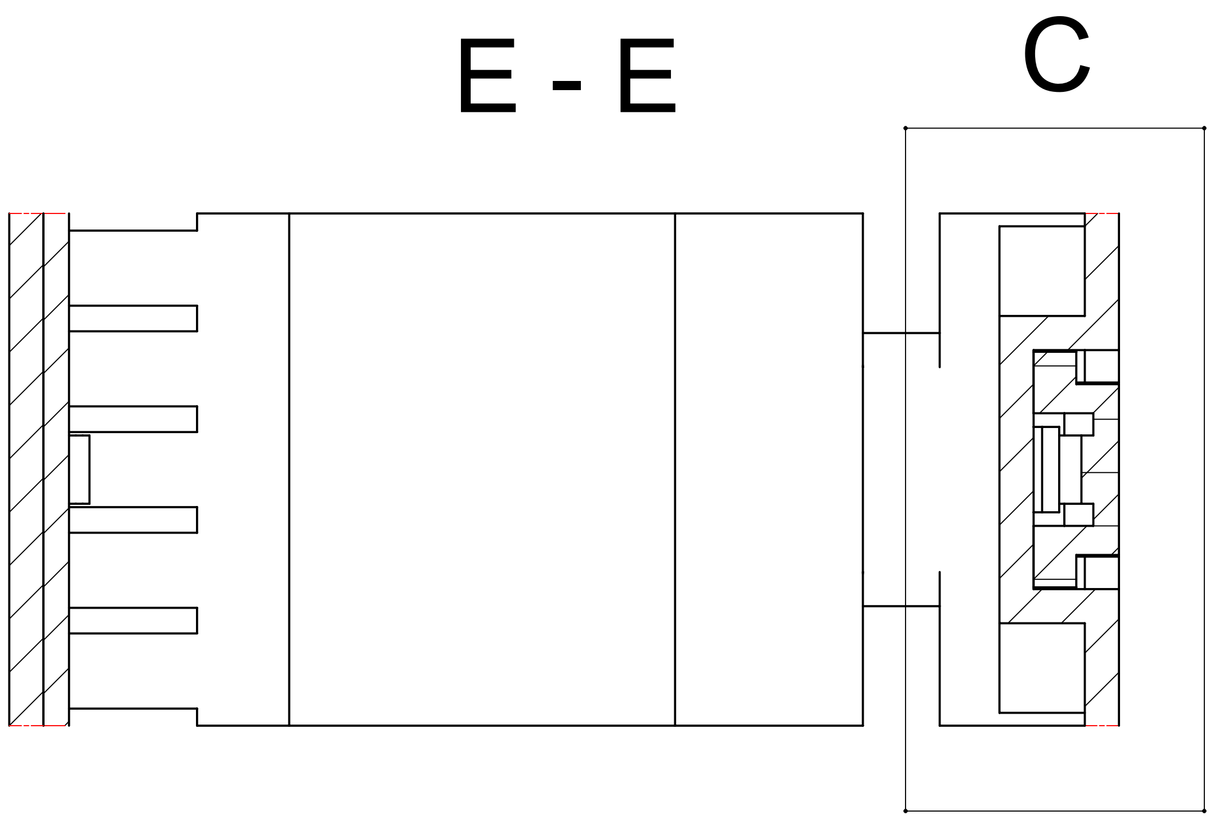
E - E
C

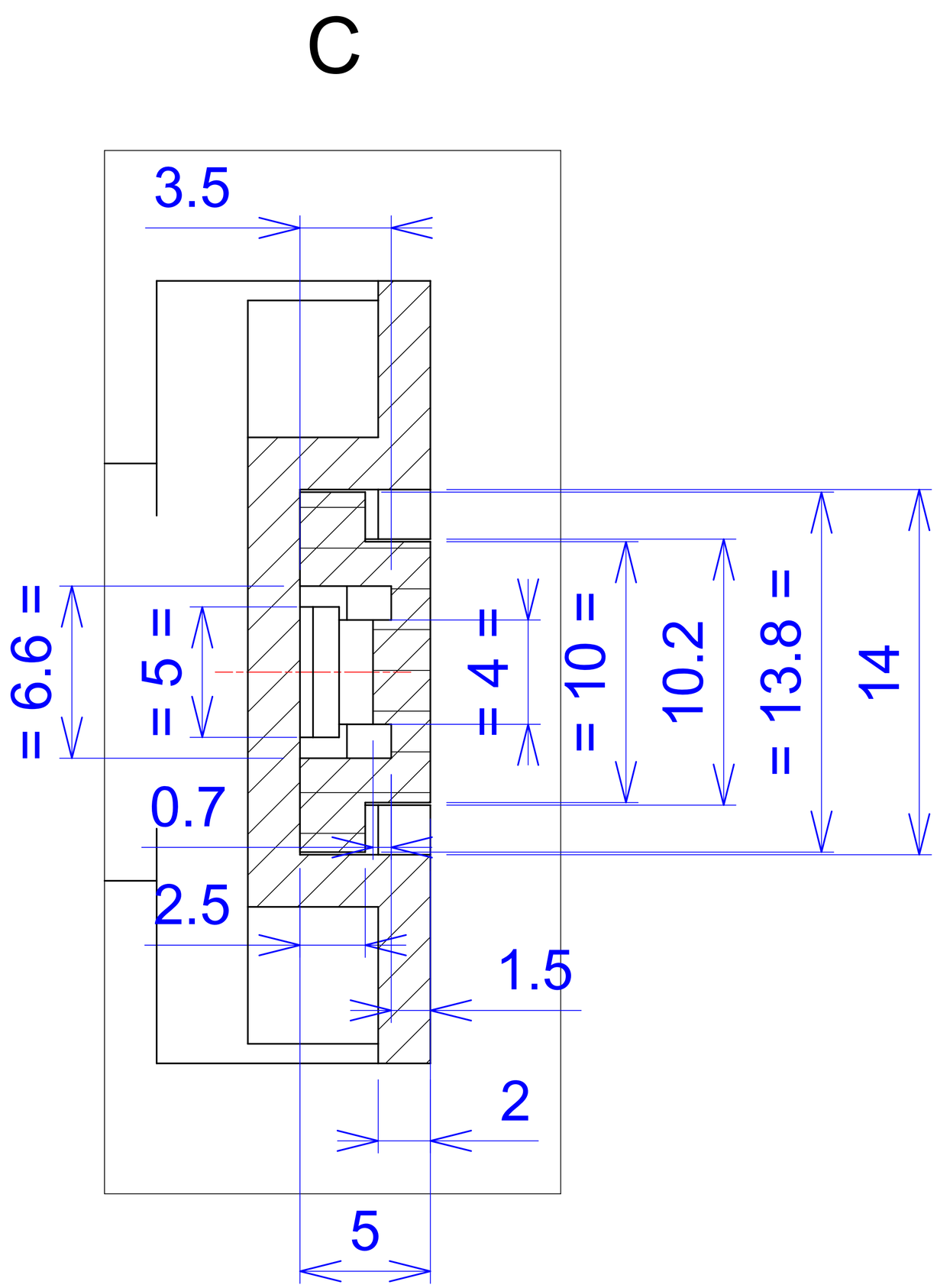
C
3.5
= 6.6 =
= 5 =
= 4 =
= 10 =
10.2
= 13.8 =
14
0.7
2.5
1.5
2
5

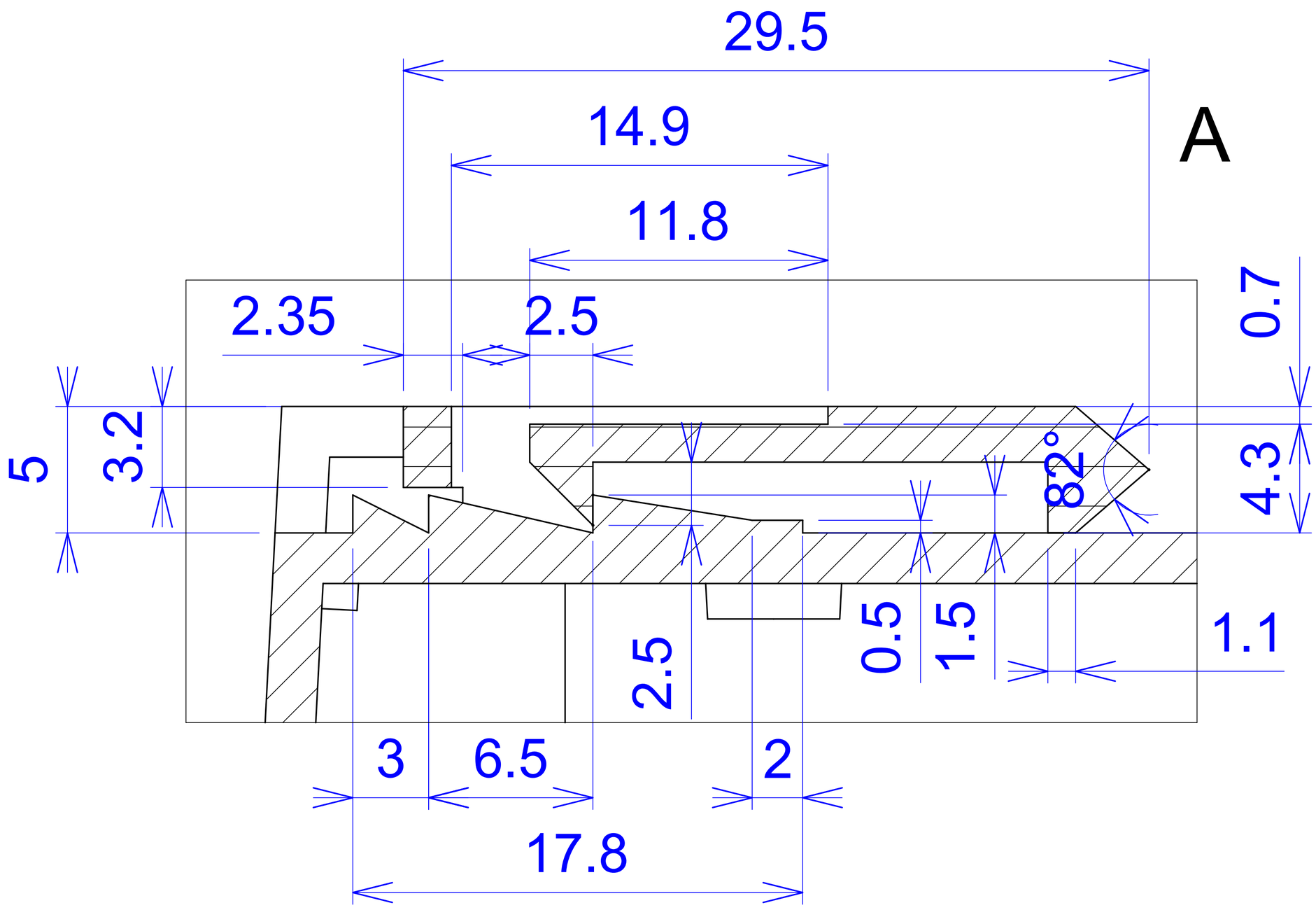
A
29.5
14.9
11.8
2.35
2.5
0.7
5
3.2
82°
4.3
0.5
1.5
1.1
2.5
3
6.5
2
17.8

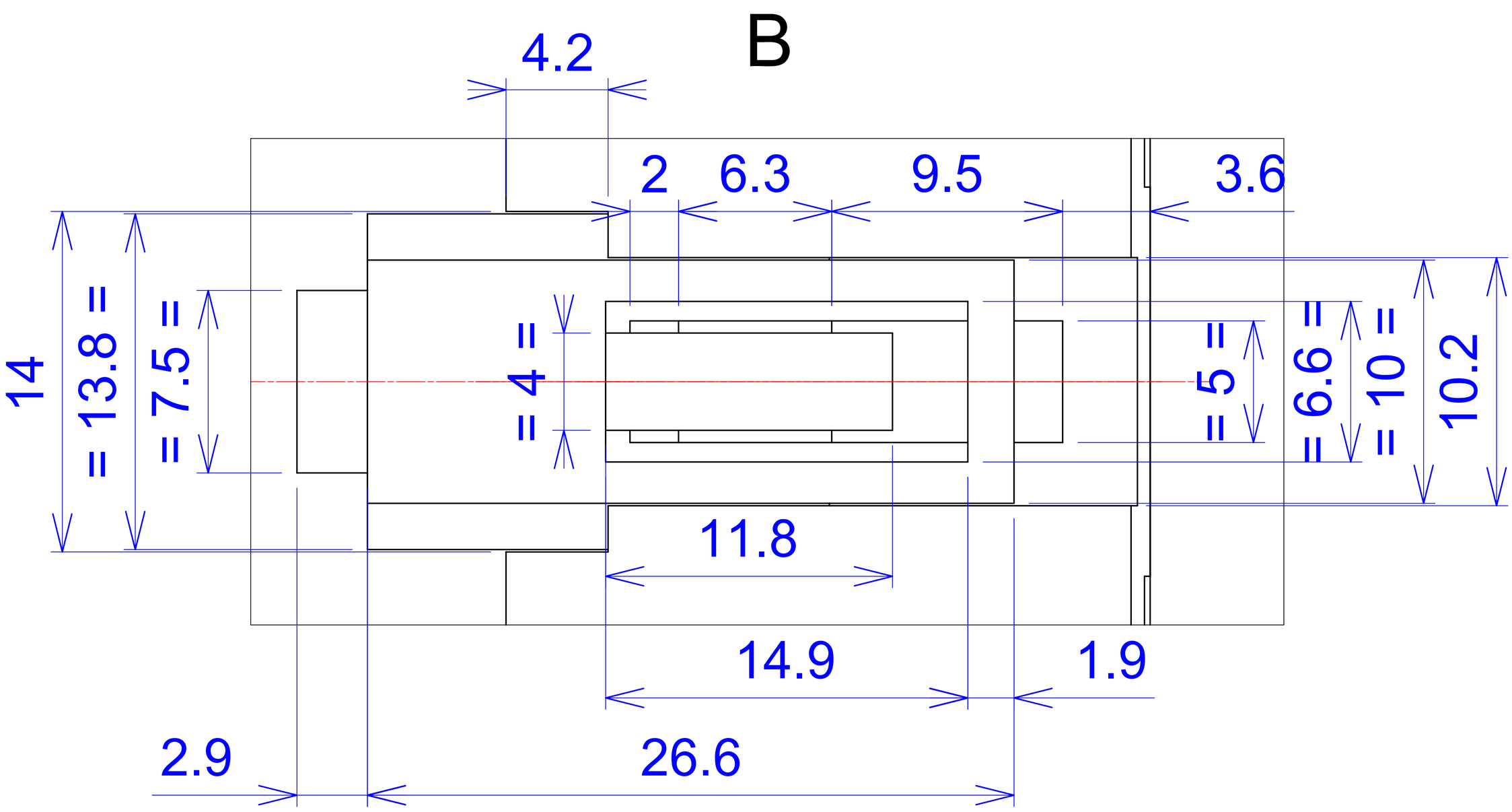
B
4.2
2
6.3
9.5
3.6
14
= 13.8 =
= 7.5 =
= 4 =
= 5 =
= 6.6 =
= 10 =
10.2
11.8
14.9
1.9
2.9
26.6