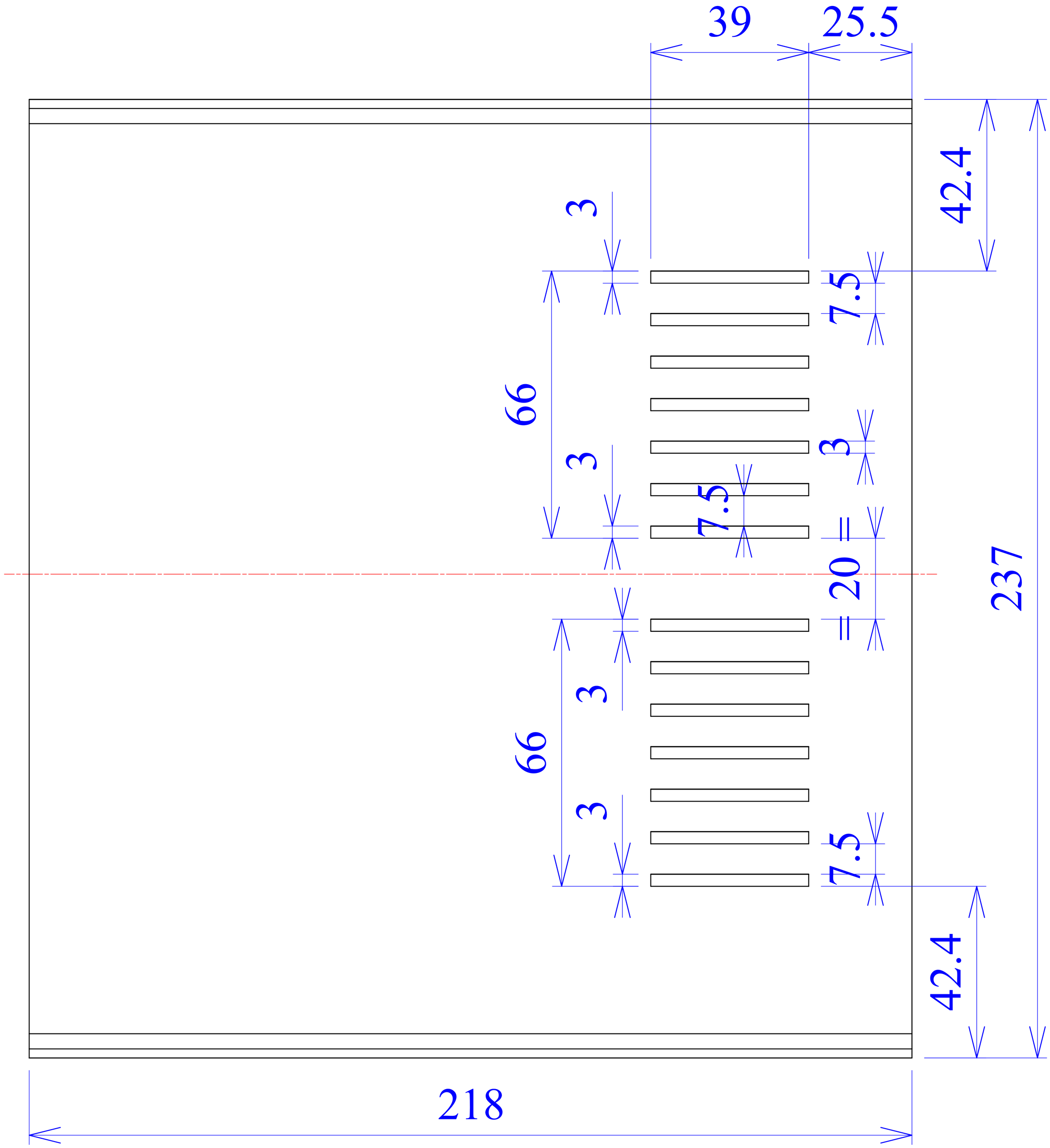
39
25.5
42.4
237
3
7.5
66
3
7.5
3
= 20 =
3
66
3
7.5
42.4
218

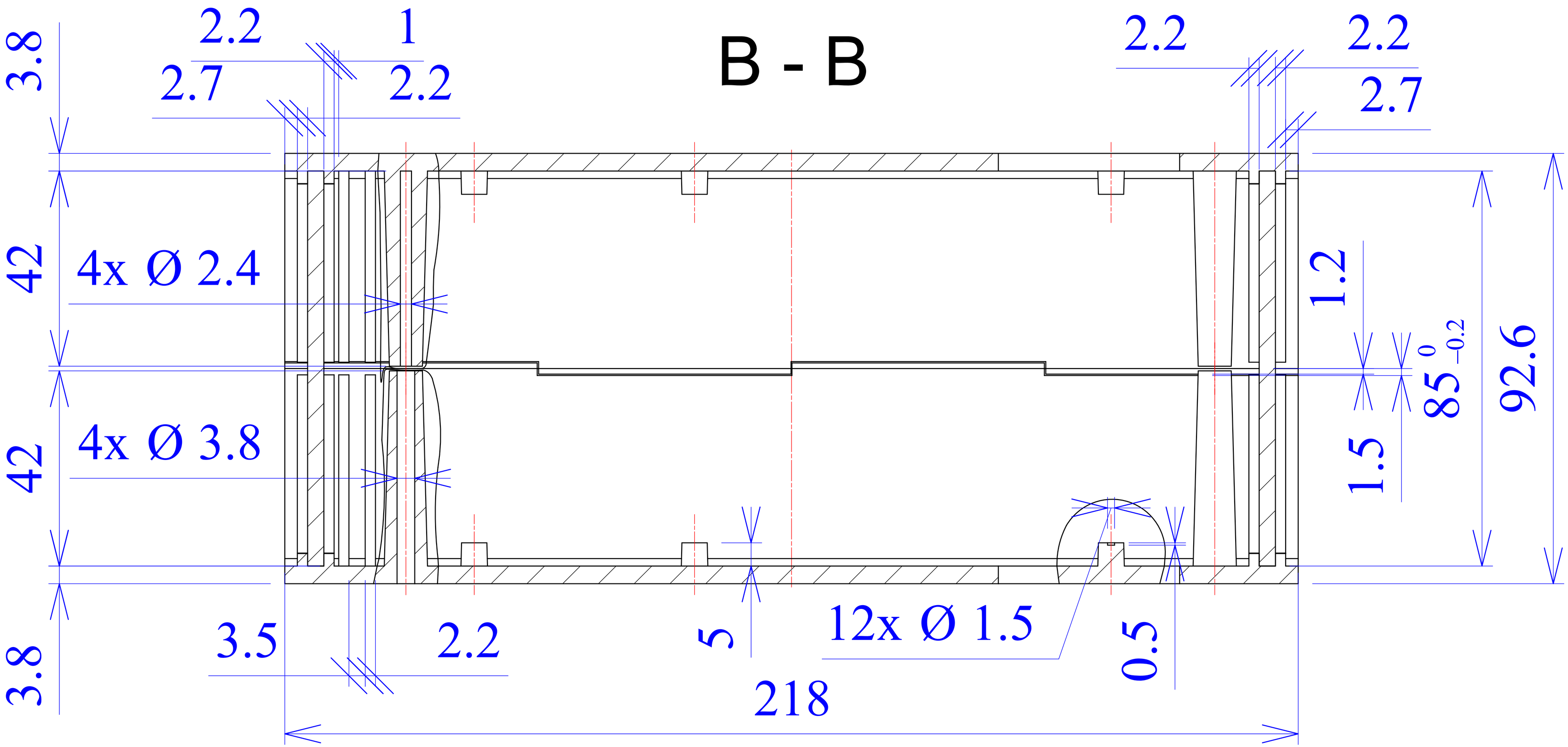
B - B
2.2
1
2.7
2.2
2.2
2.2
2.7
3.8
42
4x Ø 2.4
42
4x Ø 3.8
3.8
1.2
1.5
85 0 -0.2
92.6
3.5
2.2
5
12x Ø 1.5
0.5
218

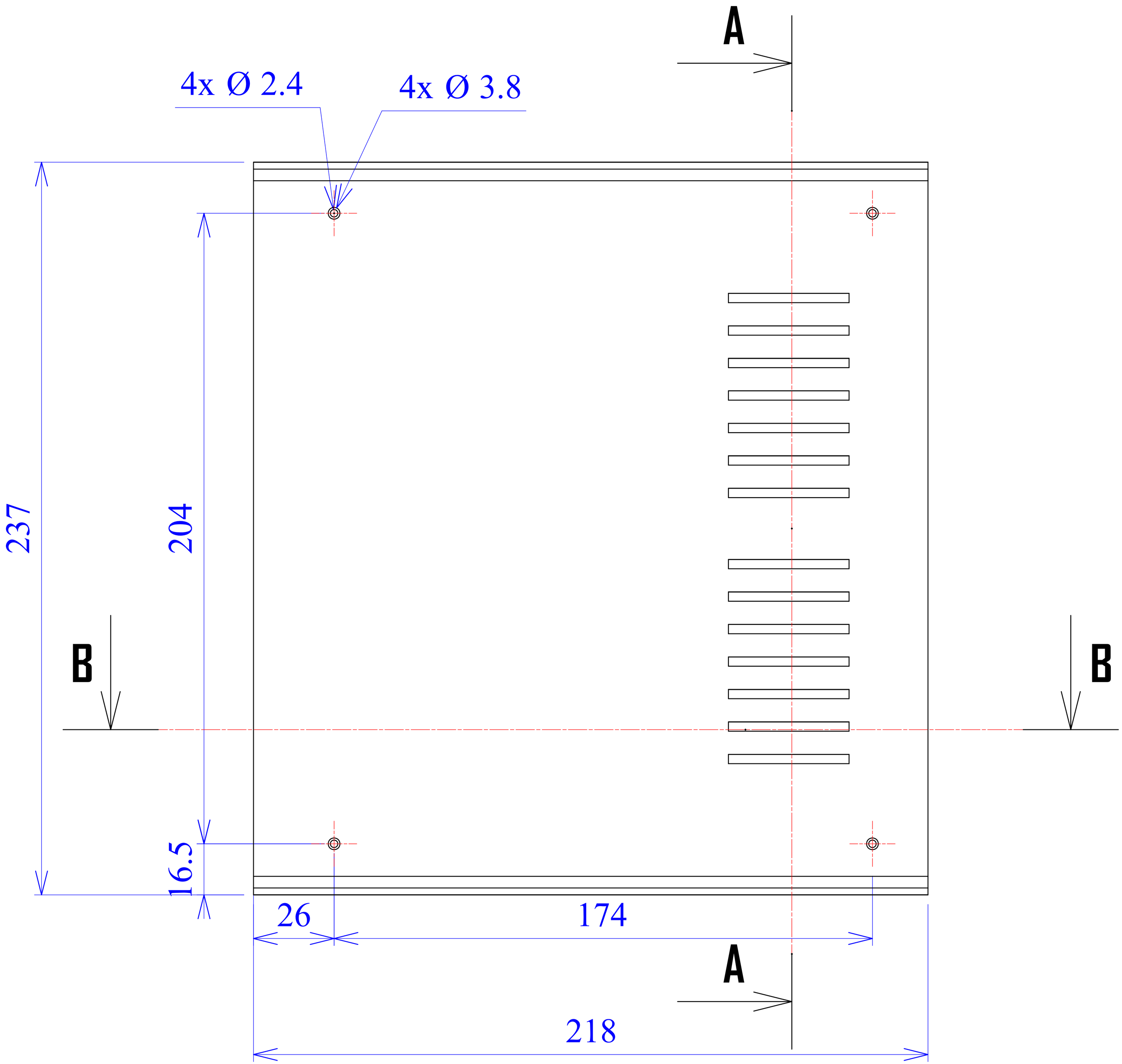
A
4x Ø 2.4
4x Ø 3.8
237
204
B
B
16.5
26
174
A
218

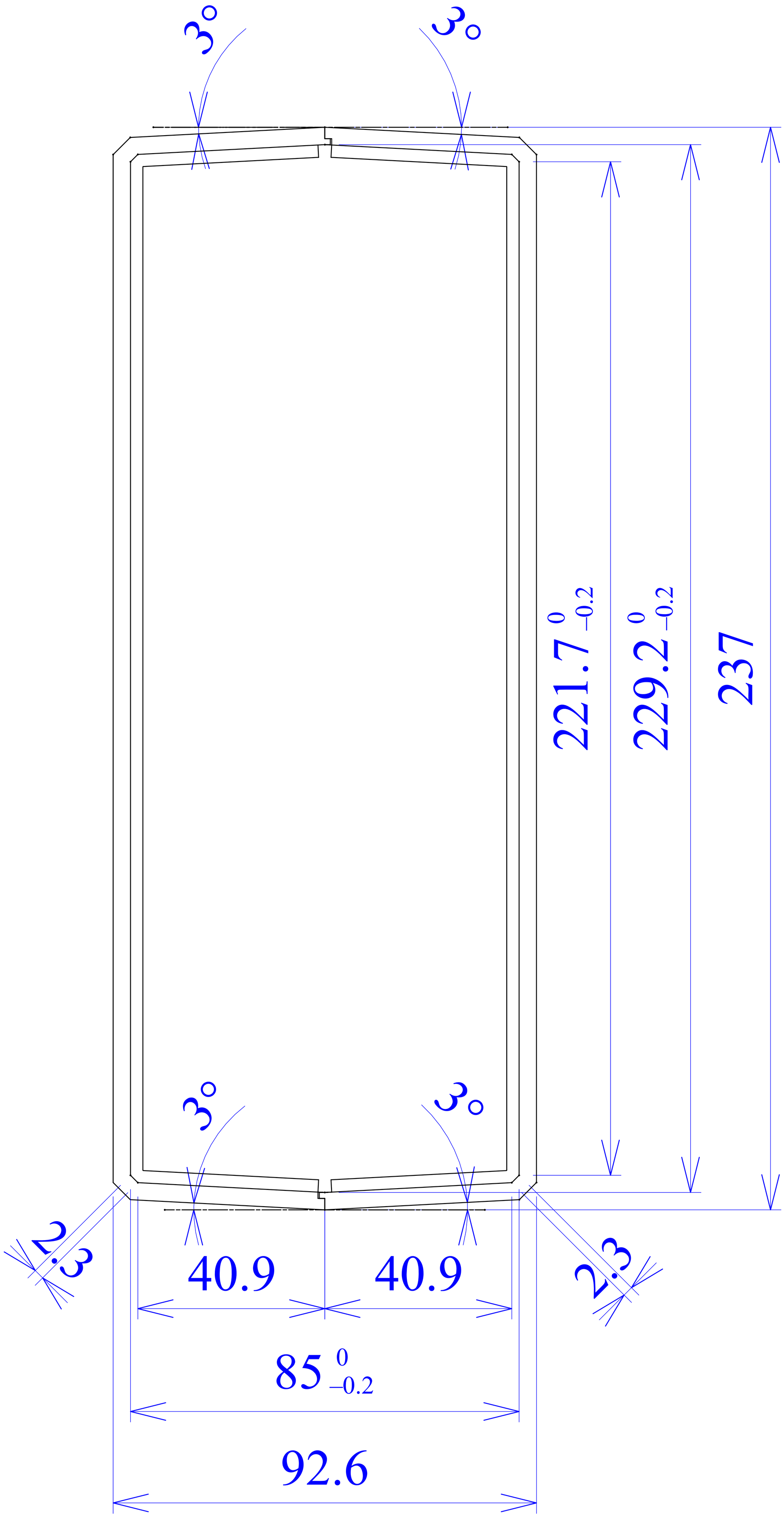
3°
3°
221.7 0 −0.2
229.2 0 −0.2
237
3°
3°
2.3
40.9
40.9
2.3
85 0 −0.2
92.6

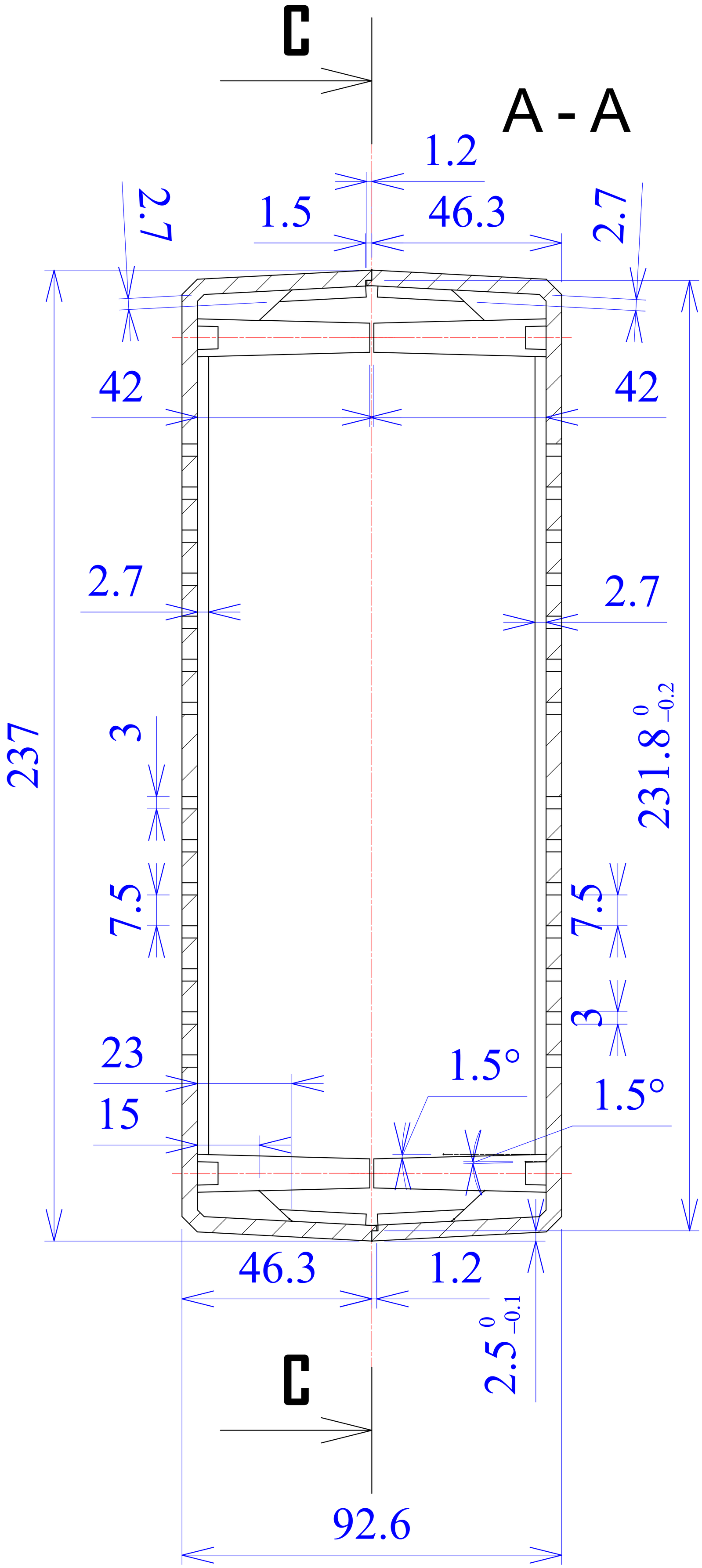
C
A - A
1.2
1.5
46.3
2.7
2.7
42
42
2.7
2.7
237
3
7.5
7.5
3
231.8 0 −0.2
23
15
1.5°
1.5°
46.3
1.2
2.5 0 −0.1
C
92.6

C - C

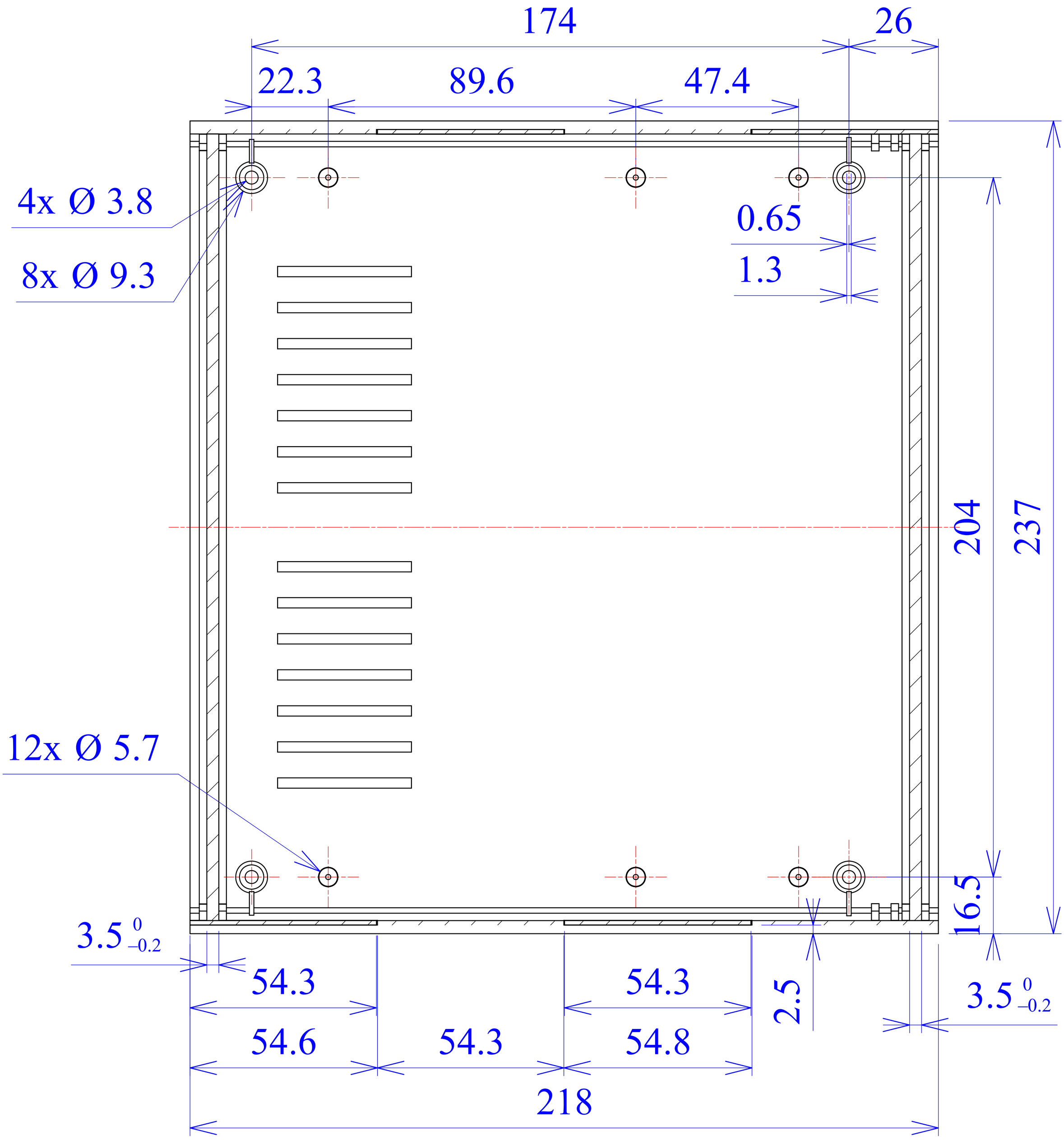
174
26
22.3
89.6
47.4
4x Ø 3.8
8x Ø 9.3
0.65
1.3
204
237
12x Ø 5.7
16.5
3.5 0 −0.2
54.3
54.3
2.5
3.5 0 −0.2
54.6
54.3
54.8
218